BH-0.66 I
Current Transformers

1. General

To be used in combination with measurement instruments: ammeters, watt-hour meters, measurement units, control relays, etc.

2. Operating conditions

2.1 Secondary current Isn: 5A

2.2 Rated voltage Ue:660 V

2.3 Frequency: 50Hz/60Hz

2.4 Operating temperature: -5°C to +40°C, humidity <80%

2.5 Altitude: ≤1000m

2.6 Standards: IEC 61869-2

2.7 Installation type: busbar or plate fixing

3. Type designation

TN-0.66 -□ I

- I — Category number
- □ — Width of window for bars
- TN-0.66 — Current transformers series

4. Technical data

Model	Transformation ratio(Ipn/Isn)(A)	Power(VA)		Accuracy class			Number of turns through iron ccore	Overall and installing dimensions(mm)
		1	0.5	0.5S	0.2	0.2S		
BH-0.66 Solid type	5/5	2.5	2.5					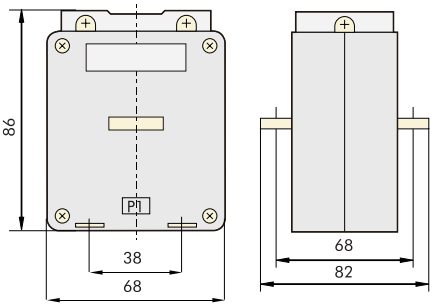
	10/5	2.5	2.5					
	15/5	2.5	2.5					
	20/5	2.5	2.5					
	25/5	2.5	2.5					
	30/5	2.5	2.5					
	40/5	2.5	2.5					
	50/5	2.5	2.5					
	75/5	2.5	2.5					
	5/1	2.5	2.5					
	10/1	2.5	2.5					
	15/1	2.5	2.5					
	20/1	2.5	2.5					
	25/1	2.5	2.5					
	30/1	2.5	2.5					
	40/1	2.5	2.5					
	50/1	2.5	2.5					
	75/1	2.5	2.5					
BH-0.66 20 I	75/5	2.5					1	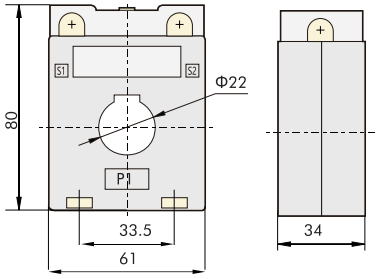
	100/5	2.5					1	
	75/1	2.5					1	
	100/5	2.5					1	
BH-0.66 30 I	30/5	2.5	2.5				5	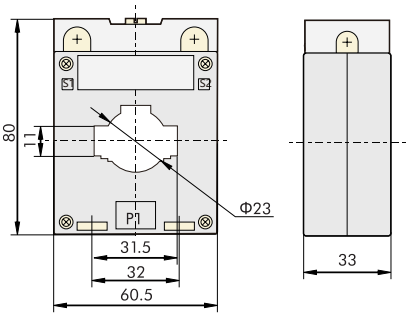
	50/5	2.5	2.5				3	
	75/5	2.5	2.5				2	
	100/5	2.5					1	
	100/5	5	5				2	
	150/5	2.5	2.5				1	
	200/5	5	5				1	
	250/5	5	5				1	
	300/5	5	5				1	
	400/5	5	5				1	
	30/1	2.5	2.5				5	
	50/1	2.5	2.5				3	
	75/1	2.5	2.5				2	
	100/1	2.5	1				1	
	100/1	5	5				2	
	150/1	2.5	2.5				1	
	200/1	5	5				1	
	250/1	5	5				1	
	300/1	5	5				1	

Model	Transformation ratio(Ipn/Isn)(A)	Power(VA)		Accuracy class			Number of turns through iron ccore	Overall and installing dimensions(mm)
		1	0.5	0.5S	0.2	0.2S		
BH-0.66 30 I B	30/5	5	2.5	2.5	2.5	2.5	5	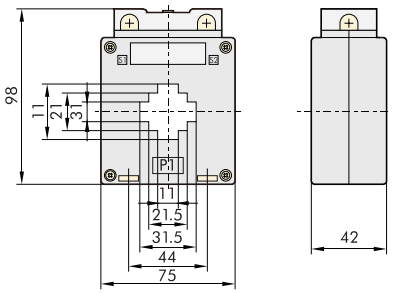
	50/5	5	2.5	2.5	2.5	2.5	3	
	75/5	5	2.5	2.5	2.5	2.5	2	
	75/5	5	2.5	2.5	2.5	2.5	1	
	100/5	5	2.5	2.5	2.5	2.5	1	
	100/5	5	5	5	5	5	2	
	150/5	5	2.5	2.5	2.5	2.5	1	
	200/5	5	5	5	5	5	1	
	250/5	5	5	5	5	5	1	
	300/5	5	5	5	5	5	1	
	30/1	2.5	1				5	
	50/1	2.5	1				3	
	75/1	5	2.5				2	
	100/1	5	2.5				2	
	150/1	5	2.5				1	
	400/1	5	5				1	
	250/1	5	5				1	
BH-0.66 40 I	30/5	2.5	2.5	2.5	2.5	2.5	5	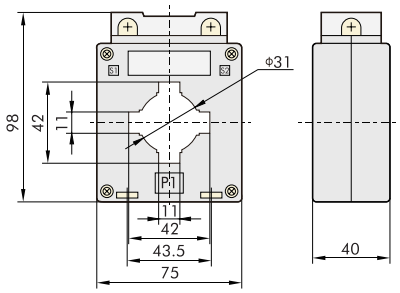
	50/5	2.5	2.5	2.5	2.5	2.5	3	
	75/5	2.5	2.5	2.5	2.5	2.5	2	
	100/5	2.5					1	
	100/5	5	5	5	5	2.5	2	
	150/5	2.5	2.5	2.5	2.5	2.5	1	
	200/5	5	5	5	5	2.5	1	
	250/5	5	5	5	5	5	1	
	300/5	5	5	5	5	5	1	
	400/5	5	5	5	5	5	1	
	500/1	10	10	5	5	5	1	
	600/1	10	10	5	5	5	1	
	30/1	5	2.5	5	5	5	5	
	50/1	5	2.5				3	
	75/1	5	2.5				2	
	100/1	5	5				2	
	150/1	5	2.5				1	
	200/1	5	5				1	
	250/1	5	5				1	
	300/1	5	5				1	
	400/1	5	5				1	
	500/1	10	10				1	

Model	Transformation ratio(Ipn/Isn)(A)	Power(VA)		Accuracy class			Number of turns through iron ccore	Overall and installing dimensions(mm)
		1	0.5	0.5S	0.2	0.2S		
	150/5	2.5		2.5	2.5	2.5	1	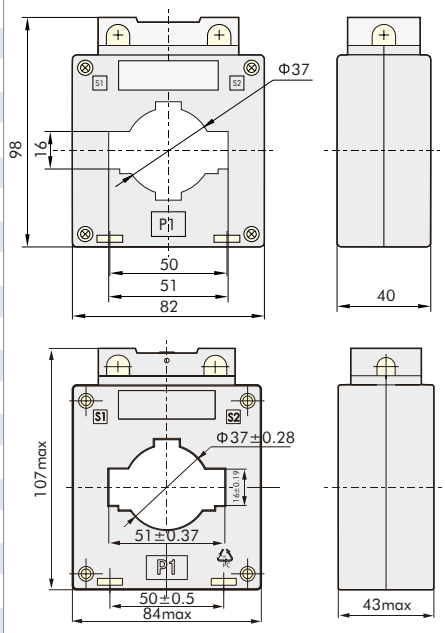
	200/5	5	5	2.5	2.5	2.5	1	
	250/5	5	5	5	5	5	1	
	300/5	5	5	5	5	5	1	
	400/5	5	5	5	5	5	1	
	500/5	10	10	5	5	5	1	
	600/5	10	10	5	5	5	1	
	750/5	10	10	10	10	5	1	
	800/5	10	10	10	10	5	1	
	1000/5	10	10	10	10	5	1	
	1200/5	20	20	20	20	5	1	
	150/1	2.5					1	
	200/1	5	5				1	
	250/1	5	5				1	
	300/1	5	5				1	
	400/1	5	5				1	
	500/1	10	10				1	
	600/1	10	10				1	
	750/1	10	10				1	
	800/1	10	10				1	
	1000/1	10	10				1	(750/5A~1500/5A class 1 class 0.5)
	200/5	5	2.5	2.5	2.5	2.5	1	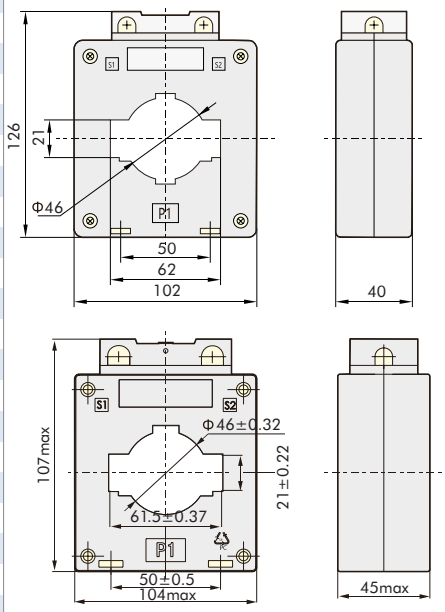
	250/5	5	5	2.5	2.5	2.5	1	
	300/5	5	5	5	5	2.5	1	
	400/5	5	5	5	5	5	1	
	500/5	10	10	5	5	5	1	
	600/5	10	10	5	5	5	1	
	750/5	10	10	10	10	5	1	
	800/5	10	10	10	10	5	1	
	1000/5	10	10	10	10	5	1	
	1200/5	20	20	20	20	5	1	
	1500/5	20	20	20	20	10	1	
	2000/5	20	20	20	20	10	1	
	200/1	5					1	
	250/1	5	5				1	
	300/1	5	5				1	
	400/1	5	5				1	
	500/1	10	10				1	
	600/1	10	10				1	
	750/1	10	10				1	
	800/1	10	10				1	
	1000/1	10	10				1	
	1200/1	20	20					(1500/5A~2000/5A class 1 class 0.5)

Model	Transformation ratio(Ipn/Isn) (A)	Power(VA) Accuracy class					Number of turns through iron core	Overall and installing dimensions (mm)
		1	0.5	0.5S	0.2	0.2S		
BH-0.66 80I	300/5	5	5	2.5	2.5	2.5	1	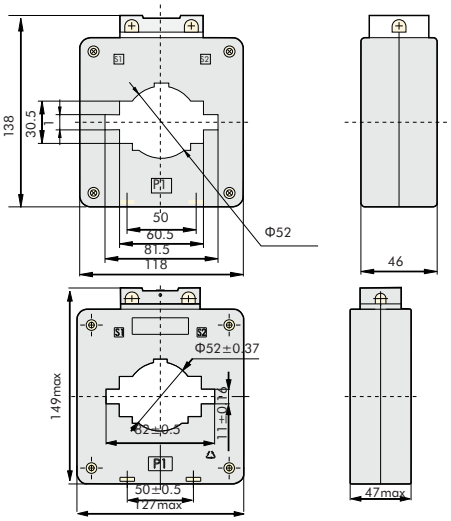 (2000/5A~2500/5A class 1 class 0.5)
	400/5	5	5	2.5	2.5	2.5	1	
	500/5	10	10	5	5	5	1	
	600/5	10	10	5	5	5	1	
	750/5	10	10	10	10	5	1	
	800/5	10	10	10	10	5	1	
	1000/5	10	10	10	10	5	1	
	1200/5	20	20	20	20	5	1	
	1500/5	20	20	20	20	10	1	
	2000/5	20	20	20	20	10	1	
	2500/5	30	30	30	30	10	1	
	300/1	5	5				1	
	400/1	5	5				1	
	500/1	10	10				1	
	600/1	10	10				1	
	750/1	10	10				1	
	800/1	10	10				1	
	1000/1	10	10				1	
	1200/1	20	20				1	
	1500/1	20	20				1	
BH-0.66 100I	600/5	10	10	10	10	5	1	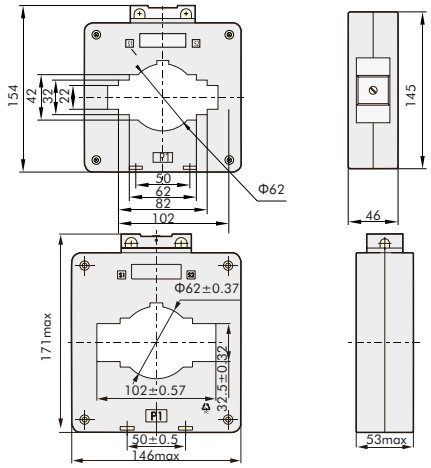 (2500/5A~3000/5A class 1 class 0.5)
	750/5	10	10	10	10	5	1	
	800/5	10	10	10	10	5	1	
	1000/5	10	10	10	10	5	1	
	1200/5	20	20	20	20	5	1	
	1500/5	20	20	20	20	10	1	
	2000/5	20	20	20	20	10	1	
	2500/5	30	30	30	30	10		
	3000/5	30	30	30	30	10	1	
	600/1	10	10				1	
	750/1	10	10				1	
	800/1	10	10				1	
	1000/1	10	10				1	
	1200/1	20	20				1	
	1500/1	20	20				1	
	2000/1	20	20				1	
BH-0.66 120I	1000/5	10	10	10	10	5	1	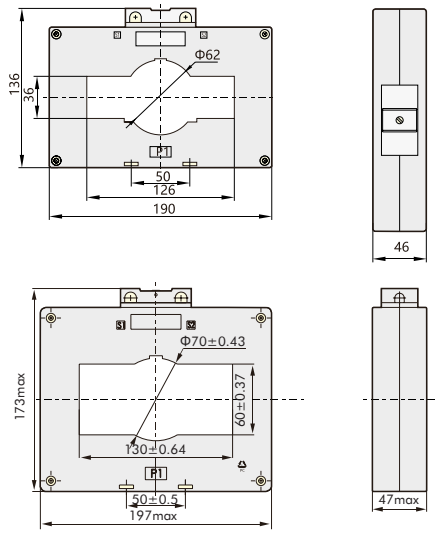 (2500/5A~4000/5A class 1 class 0.5)
	1200/5	20	20	20	20	5	1	
	1500/5	20	20	20	20	10	1	
	2000/5	20	20	20	20	10	1	
	2500/5	30	30	30	30	10	1	
	3000/5	30	30	30	30	10	1	
	4000/5	30	30	30	30	10	1	
	1000/1	10	10				1	
	1200/1	20	20				1	
	1500/1	20	20				1	
	2000/1	20	20				1	
	2500/1	40	40				1	
	3000/1	40	40				1	